S-400-12 (12V 33A) Supply schematic
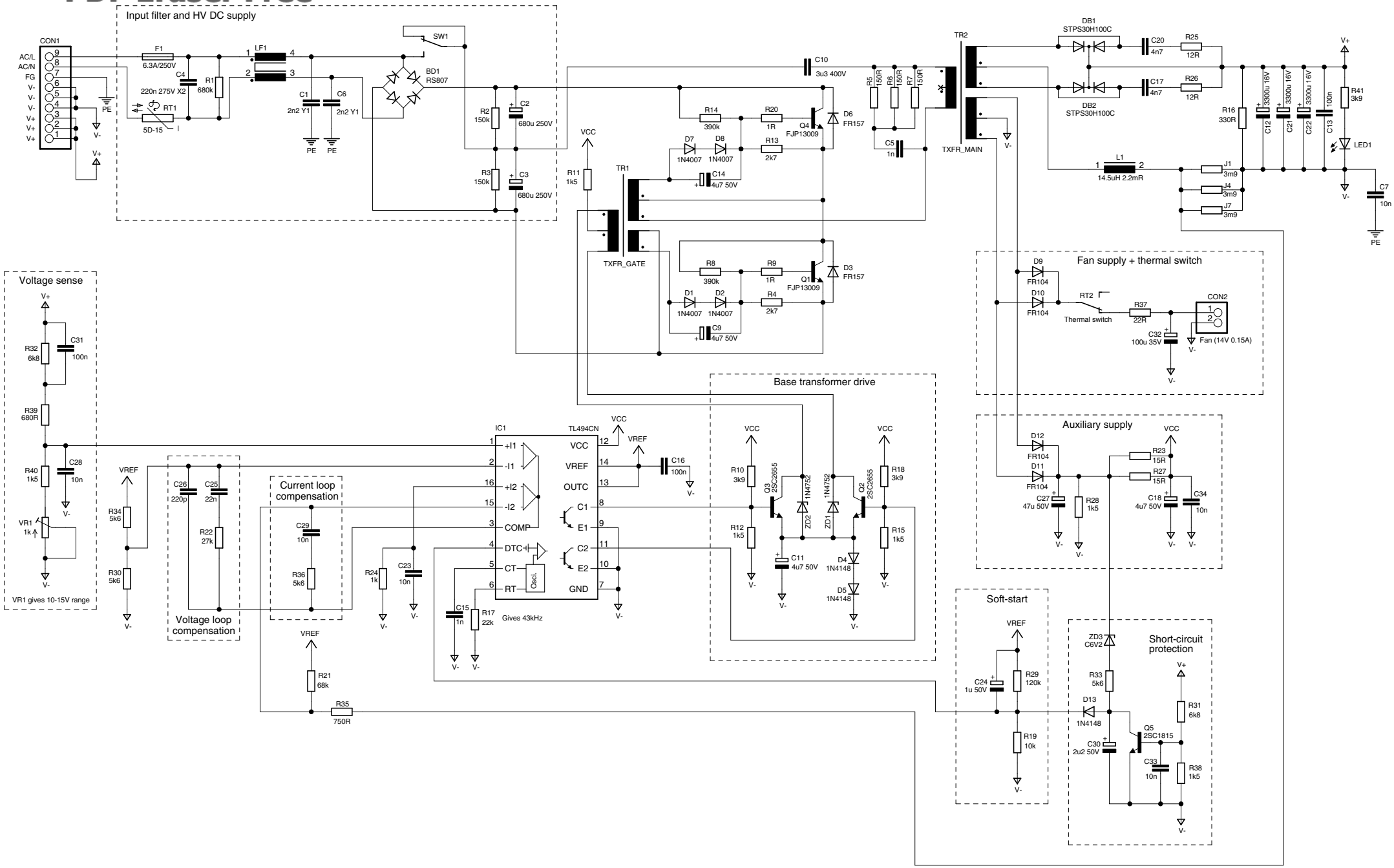
PDF Eraser Free